PRESENTATION TO SAMOFAR

Oak Ridge Molten Salt Reactor Program

A.C. Rodenburg M.Sc.
Lead Scientist – Terrestrial Energy

SAMOFAR presentation – Lecco, Italy
MSR Summer School

TERRESTRIAL ENERGY

This presentation

- **Introduction to Molten Salt Reactors**
- **Early History**
- **Oak Ridge National Laboratory MSR program**
- **Aircraft Reactor Experiment**
- **Molten Salt Reactor Experiment**

IN MEMORIAM: JOHN RICHARD (DICK) ENGEL 1931-2017

- **Chief Engineer for the Molten Salt Reactor Experiment**
- **Fountain of memory and dedication**
- **A virtue of modesty**

Dick Engel in the foreground circa 1966 supervising Glenn Seaborg, AEC Chairman, at the controls of the MSRE

THE BASICS: MOLTEN SALT REACTORS

- **MSRs are Liquid Fueled Reactors**
- **UF_4 ThF_4 and/or PuF_3 in carrier salts such $2^7LiF\text{-}BeF_2$ (FLiBe)**
- **Flows between a critical core and primary heat exchangers to transfer heat to a secondary "clean" salt**
- **High temperature (700 °C) couples well to Steam or Gas Brayton with high efficiency (up to 50%)**
- **Typically graphite moderated**
- **Can be configured as thorium breeders (MSR-Breeder) or as simplified burners (MSR-Burner) using Low Enriched Uranium**

LIQUID FUEL

- **Liquid fuel form is foundation of most MSR advantages**
- **Solid fuel is a complex challenge**
  - Slightest change to solid fuel means years of testing
  - Complex interplay between various thermal limits, uneven burnup/reactivity
  - Irradiation damage limits burn up
  - Decay heat removal means coolant must continue in every foreseeable circumstance
- **Liquid Fluoride Fuel Salts**
  - Fuel unaffected by radiation
  - No thermal limits (fuel dryout, critical heat flux)
  - No local burnup differences (mixing)
  - Fuel as liquid simplifies Decay Heat removal
  - Low pressure and very high boiling point
- **Many Liquid Fuels examined in 1950s and 60s. Only Fluoride Salts proved practical**

LIQUID FLUORIDE FUEL

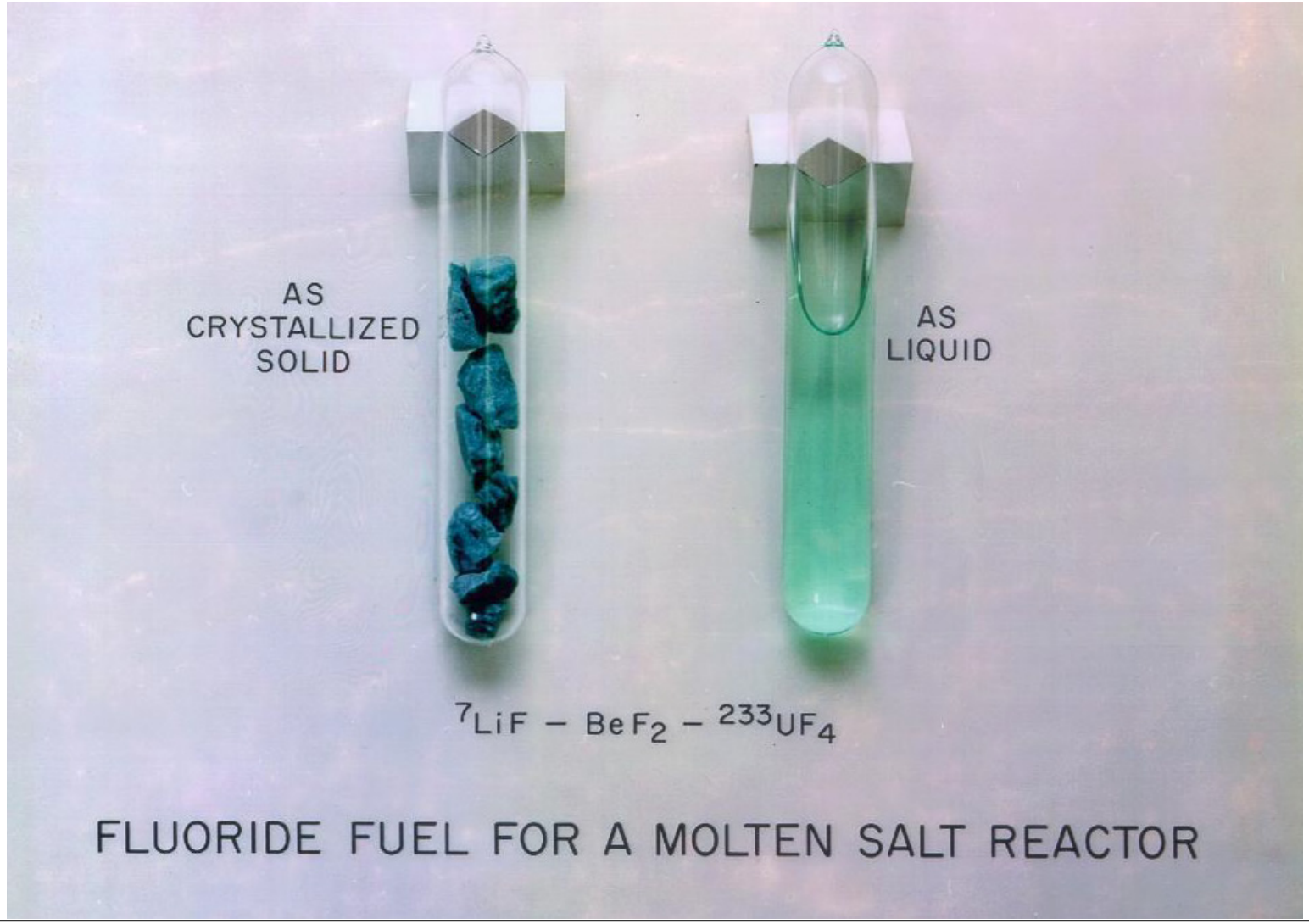

TERRESTRIAL ENERGY

ADVANTAGES OF MOLTEN SALT REACTORS

- **Safety**
  - Capable of Inherent safety and passive decay heat removal
  - Low pressure and no chemical driving force
  - Caesium and Iodine stable within the fuel salt
- **Potential For Reduced Capital Cost**
  - Inherent safety can simplify entire facility
  - Low pressure, high thermal efficiency, superior coolants (smaller pumps, heat exchangers). No complex refuelling mechanisms
- **Long Lived Waste Issues**
  - Excellent system for consuming existing transuranic wastes
  - Even MSR-Burner designs can see almost no transuranics going to waste
- **Resource Sustainability and Low Fuel Cycle Cost**
  - Thorium breeders obvious but MSR-Burners also extremely efficient on uranium use

INHERENT STABILITY IN MOLTEN SALT REACTORS

- **MSRs feature instantly acting negative temperature coefficients**
- **Changes of reactivity with time are small and slow due to continuous fuel makeup (for Burner or Breeder MSRs) combined with low Xenon worths**
- **Zonal control is also of little concern as fuel is constantly remixing and neutron diffusion lengths in graphite are broad**
- **These combined result in control rod use to regulate power is either of only modest importance or in many cases omitted altogether**
- **Rods used for shutdown purposes are a separate decision (other shutdown methods available)**
- **These behaviors also allow load following to be almost instant and driven by the amount of heat removed from the salt**
- **Led to their early proposed use as Aircraft Reactors**

U.S. HISTORIC TIMELINE – ROOTS OF MSRs – first reactor

- **First Reactor: Chicago Pile 1**
- **Part of Manhattan Project**
- **Led by Enrico Fermi**
- **1942**
- **Graphite Moderator**
- **Solid fuel (U metal and UO2)**

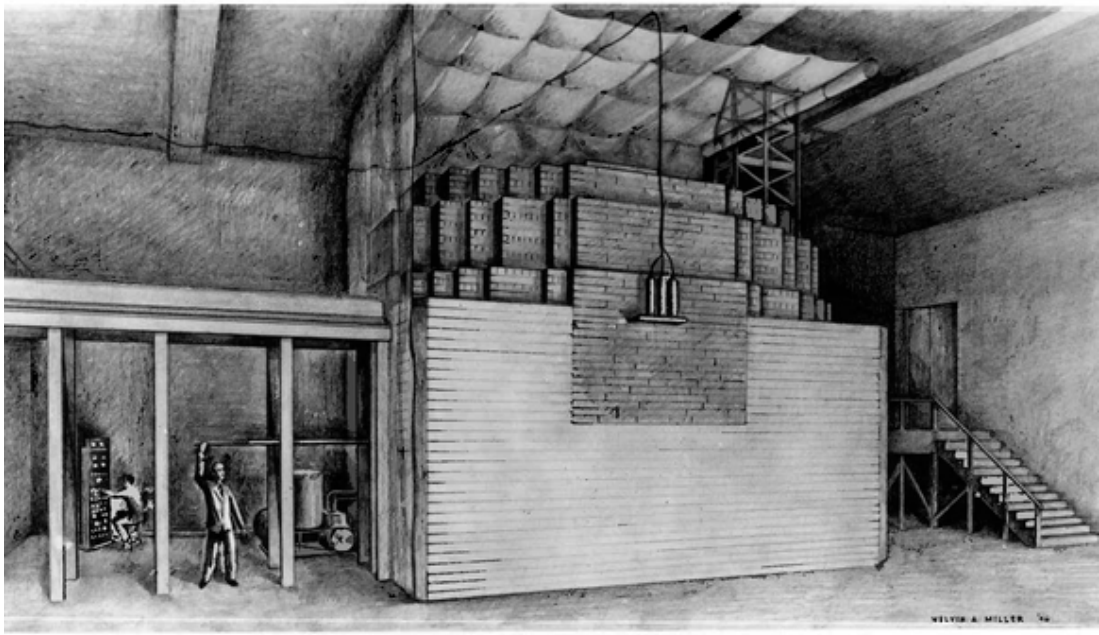

Chicago Pile I (CP-I), World's First Reactor

TERRESTRIAL ENERGY

U.S. HISTORIC TIMELINE – ROOTS OF MSRs – liquid fuel

- **Many, including Fermi, realized the potential advantages of a liquid fuel – easier fuel handling, cooling, reactor control, recovery of fission products, etc.**
- **Resulted in critical experiments in the 1940's at Los Alamos and low power water solution reactors – AHRs**
- **Next: a sizeable liquid water fuel reactor (~1 MW) in 1952**
- **Generated electricity – 150 kW**

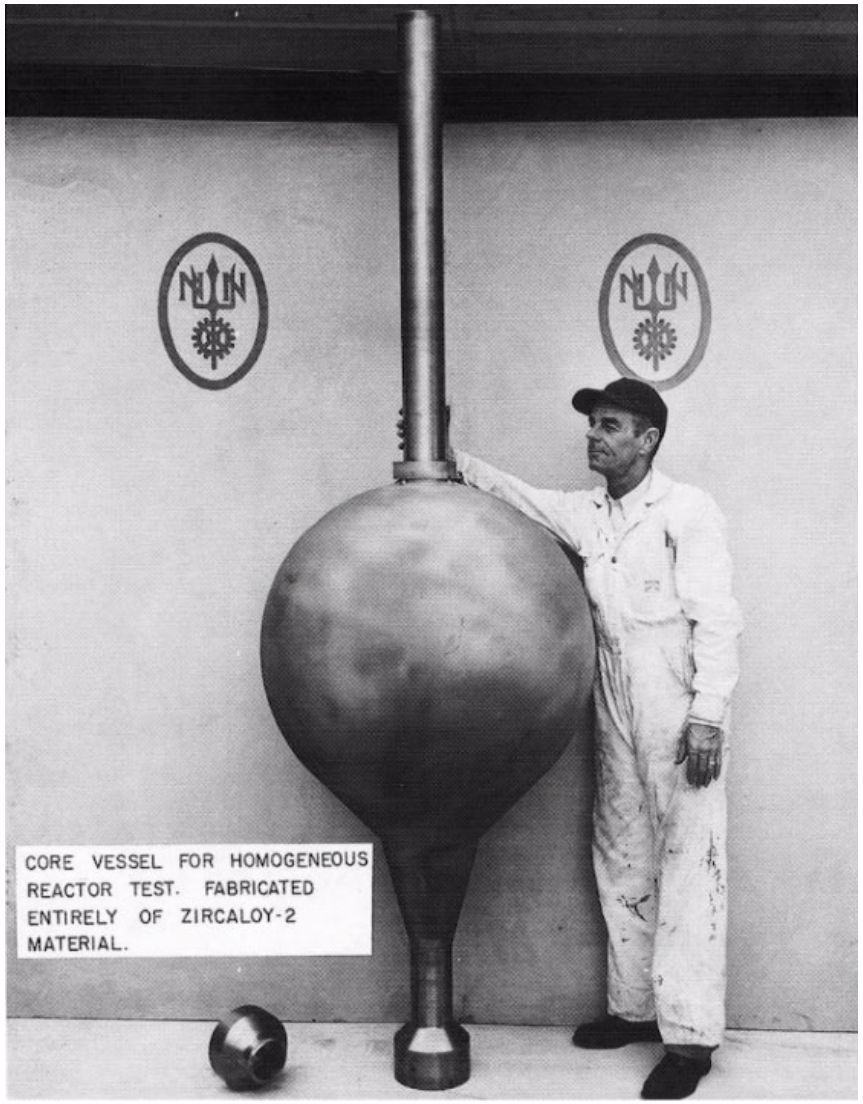

U.S. HISTORIC TIMELINE – ROOTS OF MSRs - AHRs

- **Aqueous Homogenous Reactors**
- **Light water or heavy water solvent**
- **Soluble uranium forms (nitrates, sulphates)**
- **Worked well but had some downsides:**
- **Radiolysis was high – H2 and O2, H2O2, HO were formed**
- **Required high pressure**
- **Corrosion moderately high**
- **Could a different liquid fuel avoid these problems?**

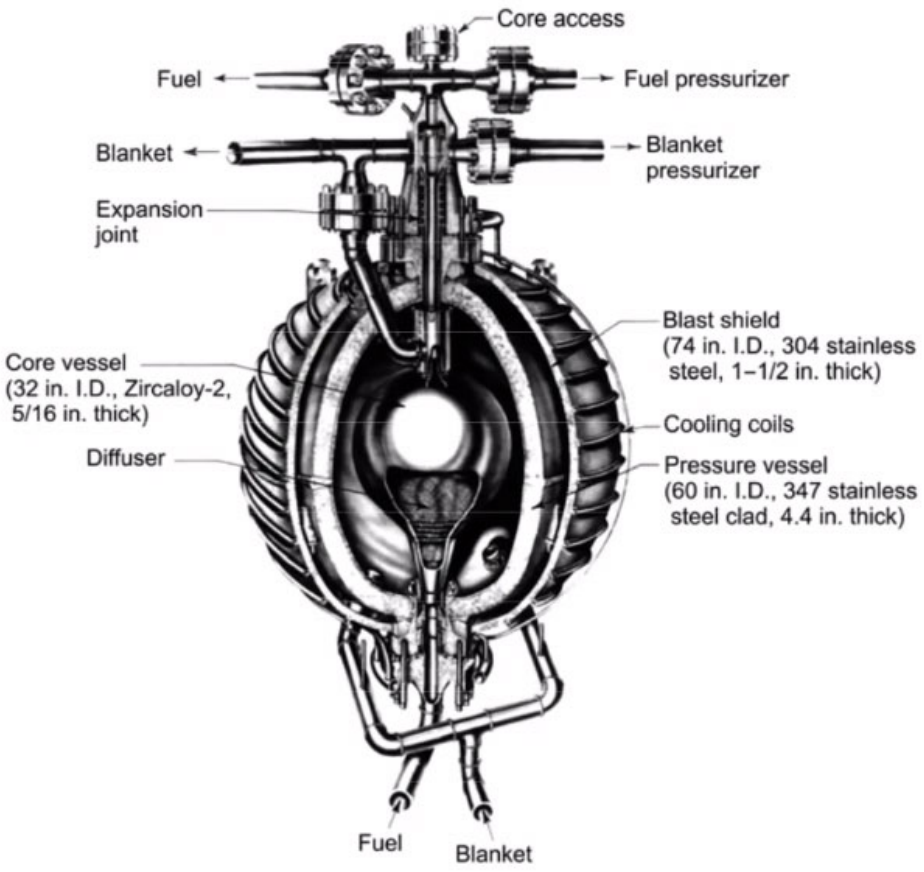

TERRESTRIAL ENERGY

U.S. HISTORIC TIMELINE - MSRs

- **First envisaged in 1940s**
- **1950s becomes leading candidate in the well funded Aircraft Reactor Program**
  - Huge knowledge base developed
  - Successful ARE test reactor operates in 1954 at up to 860 ^{o}C
- **1960s to 1970s MSBR "Thorium Breeder"**
  - World thinking is "breeders" needed due to shortage of uranium
  - Sodium Fast Breeder and Molten Salt Breeder dominate U.S. efforts
  - Very successful 8MWth MSRE 1965-69, minor issues uncovered
- **1970s Falling of the Political Axe**
  - Program cancelled mid 1970s
  - Fascinating work on MSR-Burner reactor the DMSR, 1979-80

1950's ORNL program focus

- **Main application was stated to be a compact high temperature reactor for a nuclear powered long range bomber!**
- **Main focus on homogeneous reactors (no graphite or other solid moderator)**
- **Looked at both ^{235}U converter reactors and thorium-^{233}U breeders**
- **Carrier Salt itself provides significant neutron moderation so a variety of neutron spectrums possible**
- **All studies were spherical geometry with Hastelloy N core walls**

Aircraft Nuclear Propulsion Program Initiated Work on Molten Salt Technologies

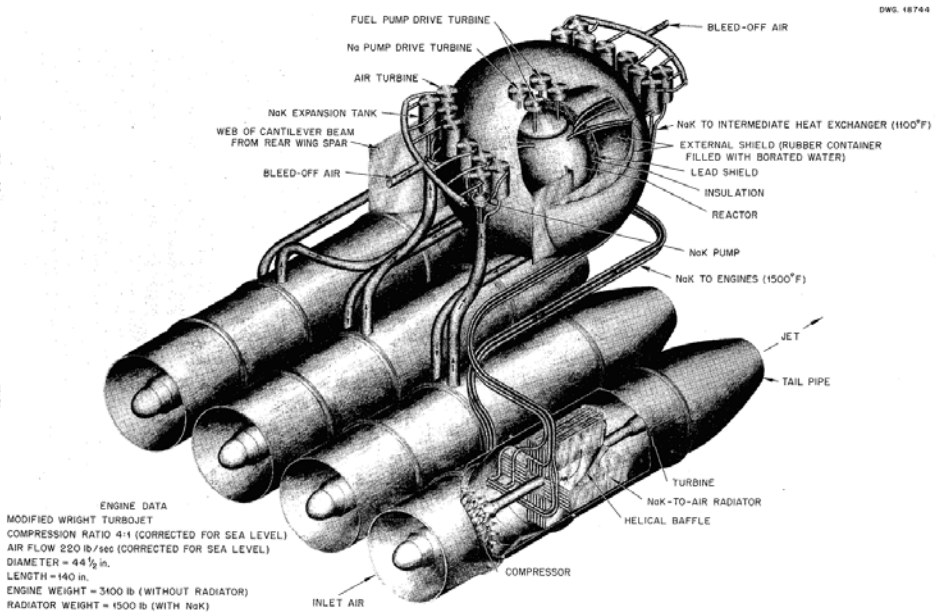

Fig. 4.33. Aircraft Power Plant (200 Megawatt).

- 1946 – 1961
- $1B Investment
- Pioneering work
  - ZrH fuels
  - Molten salt fuels
  - Liquid metal heat transfer
  - Light-weight metals
  - Advanced I&C
  - High temperature corrosion resistant materials

Two fluid homogeneous MSR

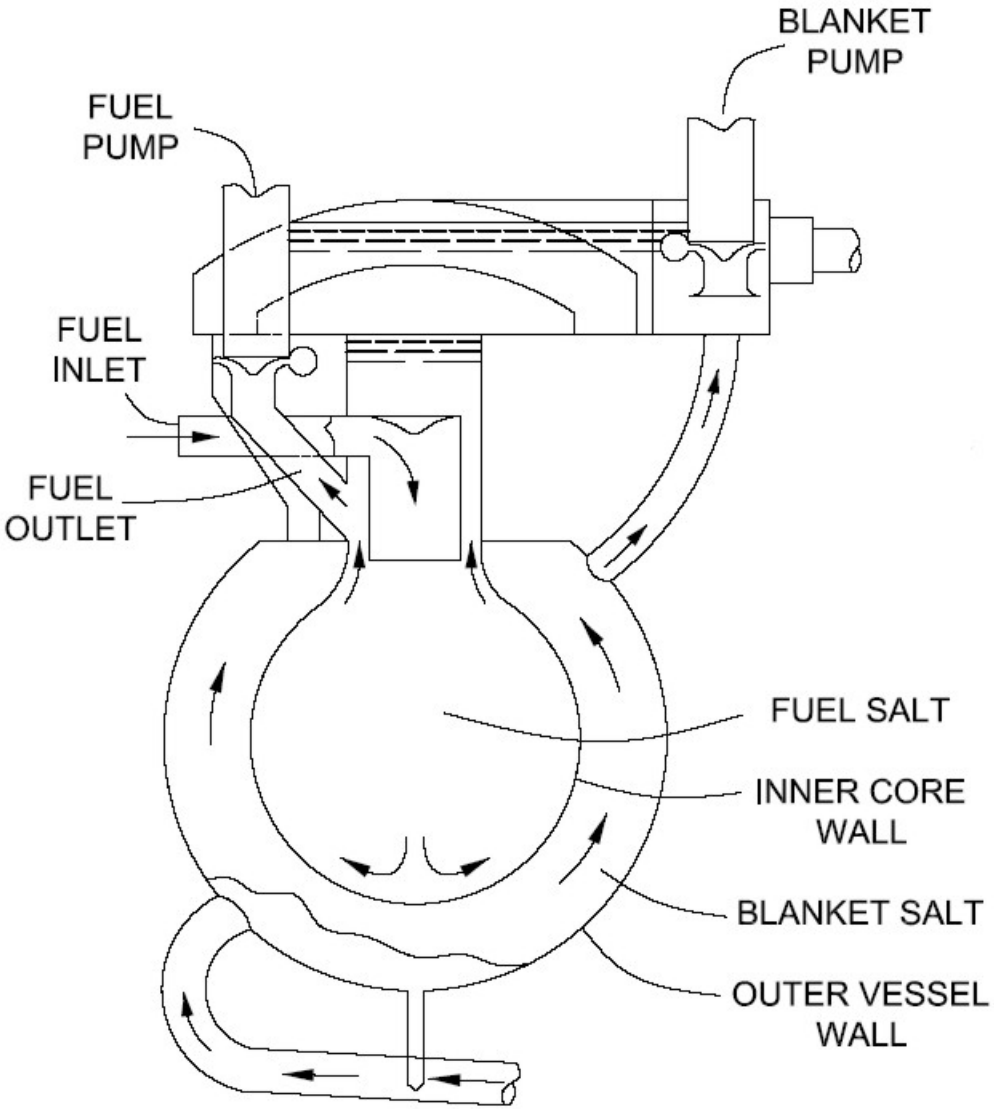

TERRESTRIAL ENERGY

The First MSR: The Aircraft Reactor Experiment (ARE) 2.5 MWt

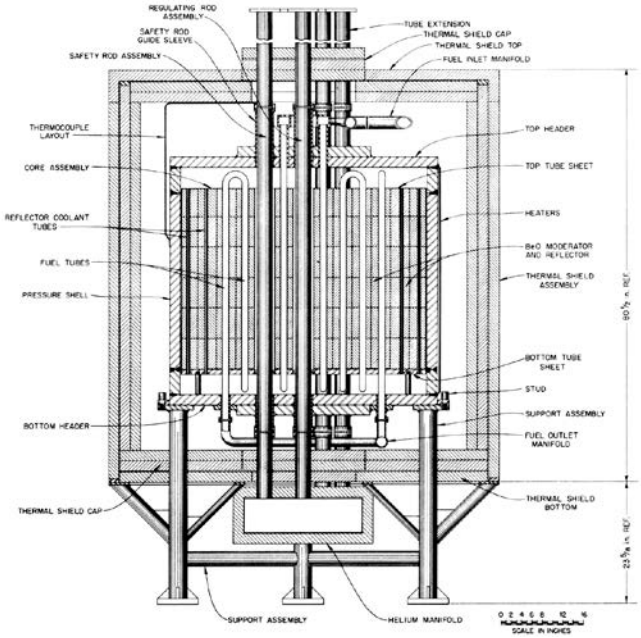

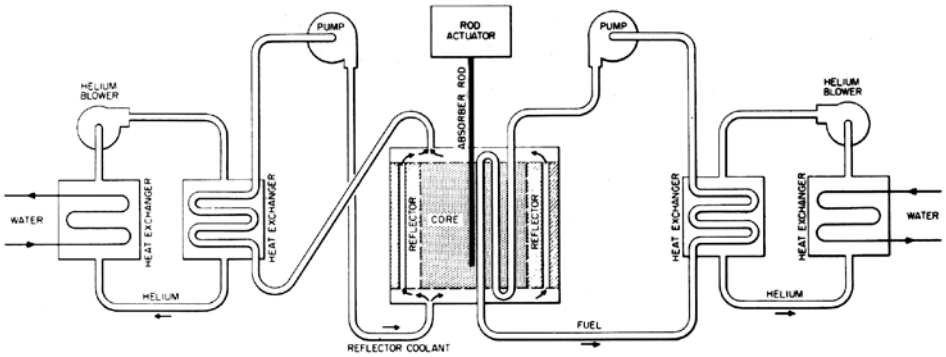

The Aircraft Reactor Experiment ran for 100 hours at the highest temperatures then achieved by a nuclear reactor (860 C).

- Operated over 9 days in 1954
- Liquid-fluoride salt circulated through beryllium reflector in Inconel tubes
- $^{235}UF_4$ dissolved in $NaF\text{-}ZrF_4$
- Produced 2.5 MW of thermal power
- Gaseous fission products were removed naturally through pumping action
- Very stable operation due to high negative reactivity coefficient
- Demonstrated load-following operation without control rods

TERRESTRIAL ENERGY

1960's: new discoveries led to change in focus

- **Graphite now proven to be compatible with fluoride salts**
- **Lower possible fissile inventory leads ORNL to change to a graphite moderated 2 fluid design**
- **Simple Sphere-Within-Sphere 2 Fluid design would only allow ~ 1 meter core**
  - Obviously too low a total power output
- **Complex fluid intermixing deemed necessary**

New discoveries, new problems!

- **Intermixing of Fuel and Blanket salt in core done by graphite "plumbing"**
- **Allows large core diameter for adequate power production**
- **Graphite first shrinks and then swells under neutron irradiation**
- **Extremely difficult "Plumbing Problems" to solve**

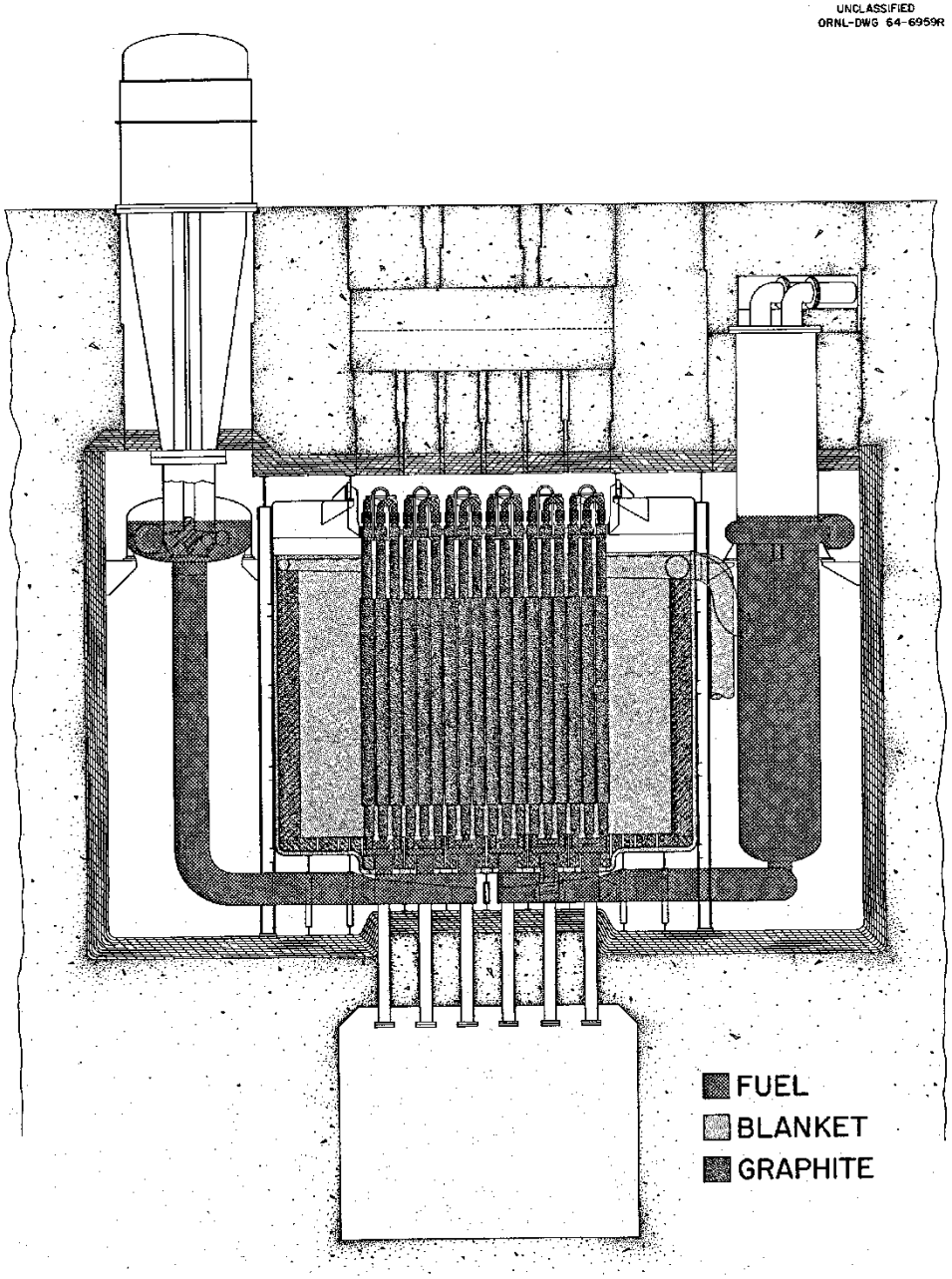

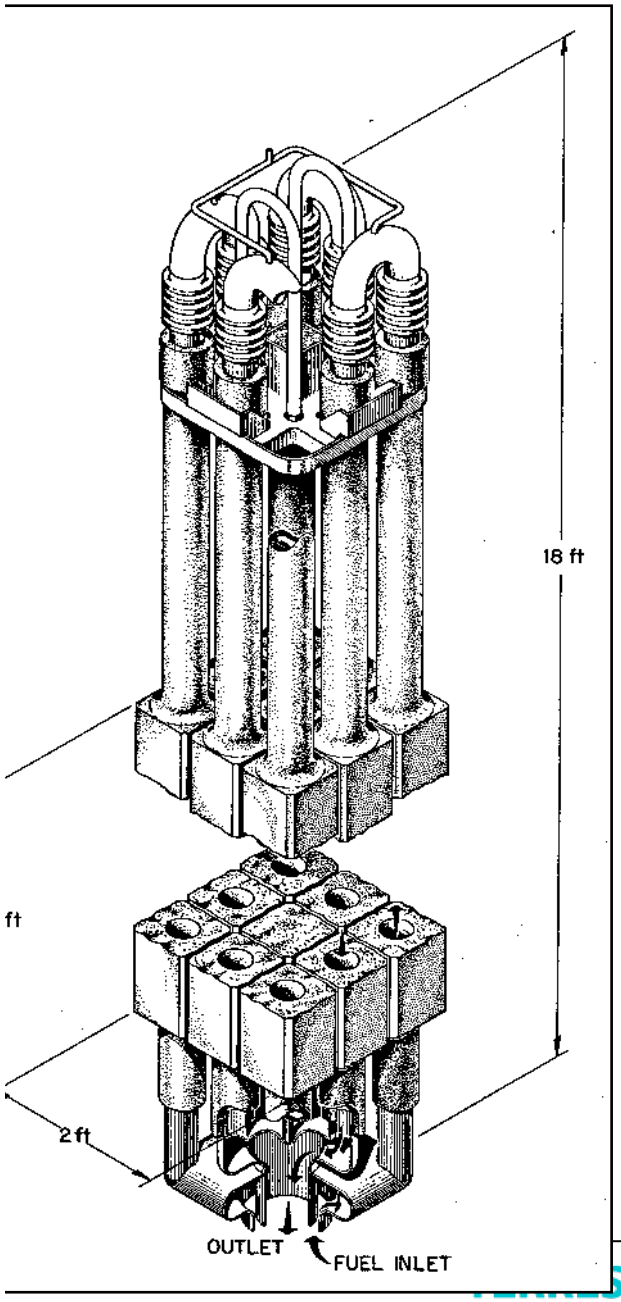

Fig. 2. Two-Region Molten-Salt Breeder.

Operating Experience: Molten Salt Reactor Experiment (MSRE) Was an Extremely Successful Demonstration

- **Operated: 1965 – 1969 at ORNL**
- **Design features:**
  - 8 MWt
  - Single fluid, simple bare core design
  - Fuels
    - $LiF\text{-}BeF_2\text{-}ZrF_4\text{-}UF_4$
    - $LiF\text{-}BeF_2\text{-}ZrF_4\text{-}UF_4\text{-}PuF_3$
- **Graphite moderated**
- **Hastelloy-N vessel and piping**
- **Achievements**
  - First use of U-233 Fuel
  - First use of mixed U/Pu salt fuel
  - On-line refueling
  - >13,000 full power hours

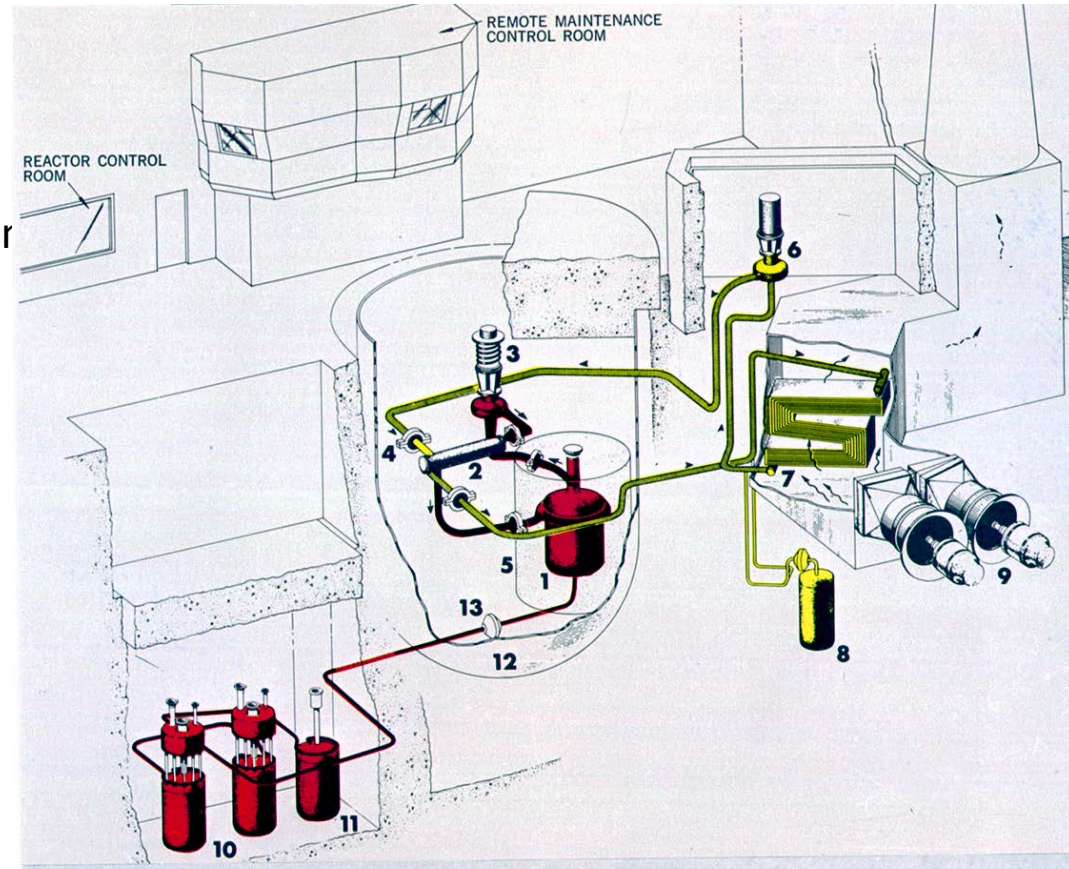

1. Reactor Vessel, 2. Heat Exchanger, 3. Fuel Pump, 4. Freeze Flange, 5. Thermal Shield, 6. Coolant Pump, 7. Radiator, 8. Coolant Drain Tank, 9. Fans, 10. Fuel Drain Tanks, 11. Flush Tank, 12. Containment Vessel, 13. Freeze Valve.

ORNL 2001-1657C EFG

TERRESTRIAL ENERGY

MOLTEN SALT RECTOR EXPERIMENT (1965-1969)

1968: start of the single-fluid era

- **New fuel processing method, while far more difficult, can work with thorium in the fuel salt**
- **2 Fluid concept abandoned**
- **“Plumbing Problem” left unsolved**
- **Major funding for MSBR cancelled in early 70s. MSR R&D extremely limited until quite recently**
- **2 Fluid concept largely forgotten**

THE 1970s SINGLE FLUID, GRAPHITE MODERATED MOLTEN SALT BREEDER REACTOR (MSBR) – 1000 MWe

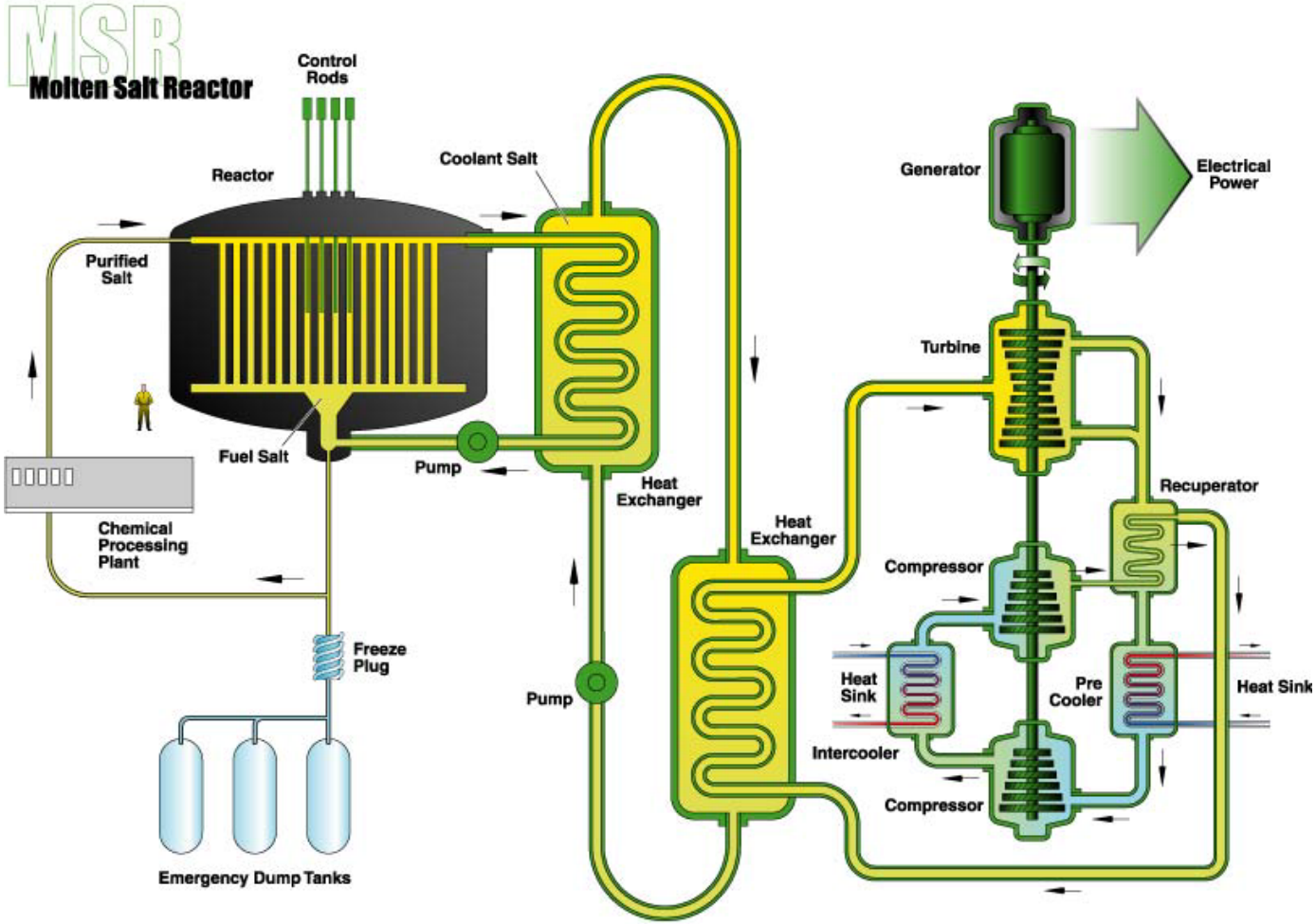

Final phase of the ORNL MSRP: the DMSR

- **Starting Premise is Oak Ridge`s *30 year Once Through Design* (1980)**
  - 1000 MWe output
  - Startup with LEU (20% ^{235}U) + Th
  - No salt processing, just add LEU
  - Large, low power density core gives 30 year lifetime for graphite (10m x 10m)
  - Similar startup fissile load as LWR (3450 kg/GWe)
  - Averages a Conversion Ratio above 0.8

Why was the program canceled? What did ORNL do **right**?

- **Early decision to focus on Th-U cycle instead of U-Pu**
  - No need for a fast spectrum, less radiotoxicity much better resource potential of thorium over uranium
- **Brought the top minds together in one place**
  - Engineers, chemists, physicists constantly update and reinforce each others efforts
- **Reactor safety kept at the forefront**
  - Inherently passive over engineered solutions
  - Early recognition that events of low probability must be planned for

Why was the program canceled? What did ORNL do **wrong**?

Early decision to focus on Th-U cycle instead of U-Pu

- In 50s to 70s, production of Pu still a top military, government priority and by extension the AEC

Brought the top minds together in one place

- MSR almost unknown to experts outside Oak Ridge. Government relies on opinions of experts from across the country

Reactor safety kept at the forefront

- Oak Ridge director and inventor of the PWR, Alvin Weinberg drew the ire of the AEC`s infamous Milton Shaw by raising safety concerns of LWRs
- Weinberg fired as director and funding for Molten Salt program cut off in the early 1970s. Topic almost *forbidden* by AEC and later DOE since then

MSRE Knowledge Base

- **The design and operation of the MSRE provides a great bank of knowledge**
- **Extensive safety analysis performed before construction**
- **Extensive operational knowledge gained:**
  - Inherent and predictable stability
  - Fuel salt production and handling
  - System maintenance activities
- **Did uncover two material issues. Later largely solved by adjusting alloy makeup and redox potential**
  - Fission product (Tellurium) induced surface cracking
  - Helium Embrittlement by n,alpha reactions in Nickel
- **ORNL work on MSR-Breeder concepts up to mid 1970s cumulated in the Single Fluid, Graphite Moderated Molten Salt Breeder Reactor**

Further Reading

- **"Molten Salt Reactors: History, Status and Potential"**

http://moltensalt.org/references/static/downloads/pdf/NAT_MSRintro.pdf

"ORNL'S MOLTEN-SALT REACTOR PROGRAM (1958-1976)"

http://energyfromthorium.com/msrp/

Molten Salt Reactor Documents Libraries are available online!

http://moltensalt.org.s3-website-us-east-1.amazonaws.com/references/static/downloads/pdf/index.html

CONTACT DETAILS

A.C. Rodenburg M.Sc.
Lead Scientist

Terrestrial Energy Inc.
2275 Upper Middle Rd East, Suite 102
Oakville ON L6H 0C3
CANADA
T: +1(905) 766-3770
E: info@TerrestrialEnergy.com
www.TerrestrialEnergy.com